DWG NO. 3672-32

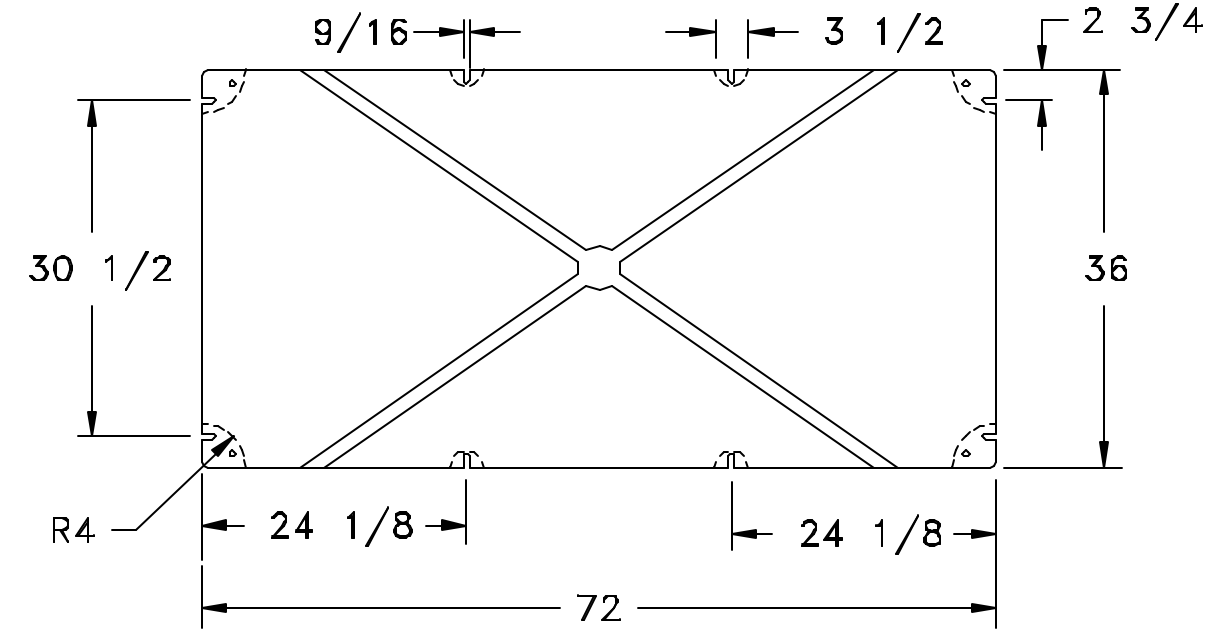

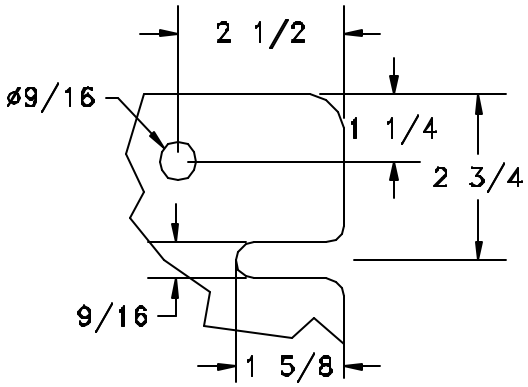

CORNER DETAIL

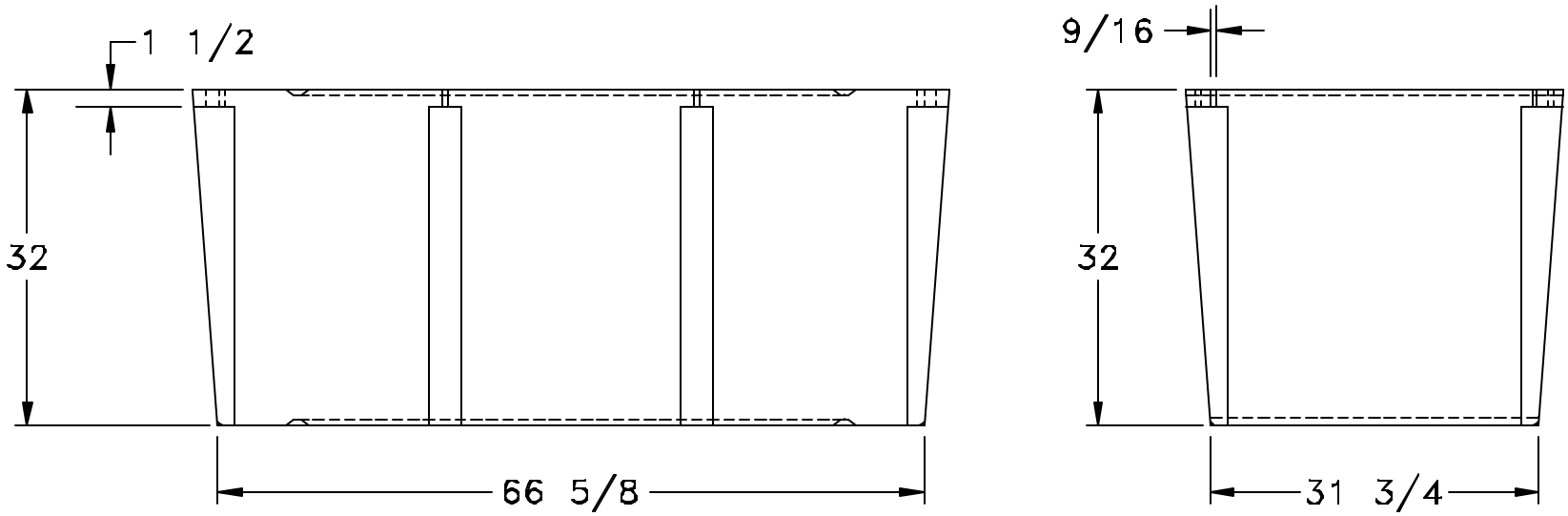

REV	DESCRIPTION	DATE	APVD

DRAWN REH	DATE 1-5-01	MATERIAL POLYETHYLENE .175 NOM. WALL	ACE ROTO-MOLD A DIVISION OF DEN HARTOG INDUSTRIES, INC.
APPROVED	DATE		PART NO. 3 x 6 x 32 FLOAT
SCALE NONE	THIRD ANGLE PROJECTION	PART WEIGHT AF 72 LBS. FF 115 LBS.	SIZE A DWG NO. 3672-32 REV

UOS DIMENSIONS ARE IN INCHES
GENERAL TOLERANCES
± 1% @ 68° F